legrand®

Cablofil

FTVI90

VERTICAL 90° INSIDE ELBOW BASE

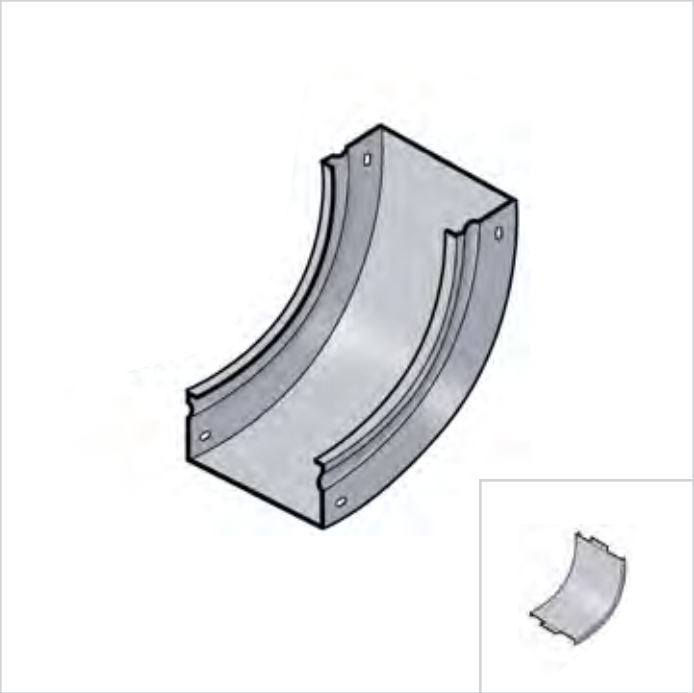

FEATURES

- Strong corrosion resistant steel construction
- Rolled edge for cable protection
- Unique design allows covers to snap on
- 18 gage steel (t)

COMPATIBLE COVER

FTCVI90

(sold separately)

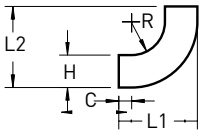

	TRAY HEIGHT (H)		TRAY WIDTH (W)		RADIUS (R)		LENGTH 1 (L1)		LENGTH 2 (L2)		TANGENT (C)		WEIGHT		PG	BL	YL	OR
	INCHES	MM	INCHES	MM	INCHES	MM	INCHES	MM	INCHES	MM	INCHES	MM	LBS	KG	STANDARD		OPTIONAL	
FTVI90 50/50	2.0	50	2.0	50	0.8	20	3.9	100	3.9	100	1.2	30	0.5	0,21	340 979	960 040	960 396	960 219
FTVI90 50/100	2.0	50	3.9	100	3.9	100	7.1	180	7.1	180	1.2	30	1.1	0,49	340 980	960 041	960 397	960 220
FTVI90 50/200	2.0	50	7.9	200	3.9	100	7.1	180	7.1	180	1.2	30	1.6	0,72	340 982	960 042	960 398	960 221
FTVI90 50/300	2.0	50	11.8	300	3.9	100	7.1	180	7.1	180	1.2	30	2.1	0,95	340 983	960 043	960 399	960 222
FTVI90 100/100	3.9	100	3.9	100	5.9	150	11.8	300	11.8	300	2.0	50	3.2	1,47	340 995	960 044	960 400	960 223
FTVI90 100/200	3.9	100	7.8	200	5.9	150	11.8	300	11.8	300	2.0	50	4.5	2,06	340 997	960 045	960 401	960 224
FTVI90 100/300	3.9	100	11.8	300	5.9	150	11.8	300	11.8	300	2.0	50	5.8	2,62	340 998	960 046	960 402	960 225
FTVI90 100/500	3.9	100	19.7	500	5.9	150	11.8	300	11.8	300	2.0	50	8.4	3,83	341 000	960 047	960 403	960 226
FTVI90 100/600	3.9	100	23.6	600	5.9	150	11.8	300	11.8	300	2.0	50	9.5	4,30	341 101	960 048	960 404	960 227

FINISHES			
SYMBOL		MATERIAL	FINISH & STANDARD
STANDARD	PG	Carbon Steel	**Pre-Galvanized:** Continuous Galvanization Before Fabrication ASTM A 653
STANDARD	BL	Carbon Steel ASTM A510 Grade 1008	**Black Painted:** Black Powder Coated ASTM D 3451
OPTIONAL	YL	Carbon Steel ASTM A510 Grade 1008	**Yellow Painted:** Yellow Powder Coated ASTM D 3451
OPTIONAL	OR	Carbon Steel ASTM A510 Grade 1008	**Orange Painted:** Orange Powder Coated ASTM D 3451

© 2012 Legrand/Cablofil 02/12

Legrand/Cablofil
8319 State Route 4
Mascoutah, IL 62258 USA
1-800-658-4641
618-566-3230
Fax 618-566-3250
www.legrand.us/cablofil